UKW SWITCH

SELF-CONTAINED (remote refrigerated = w/o condensing unit)

(operator side)

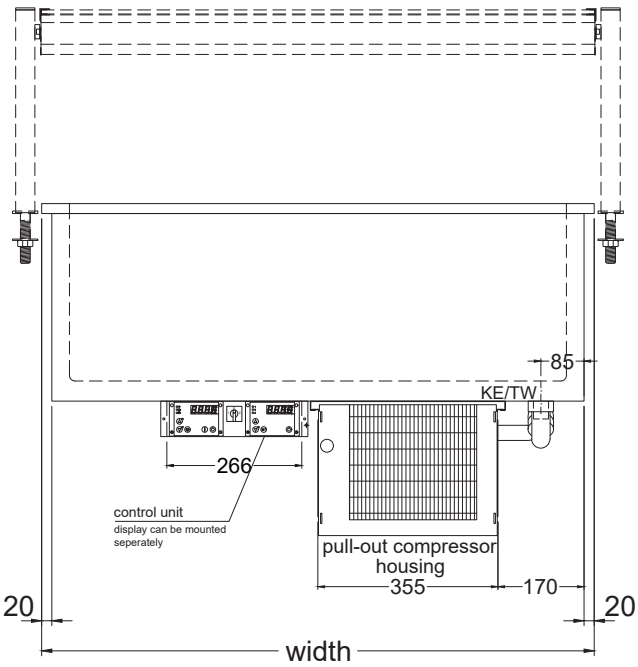

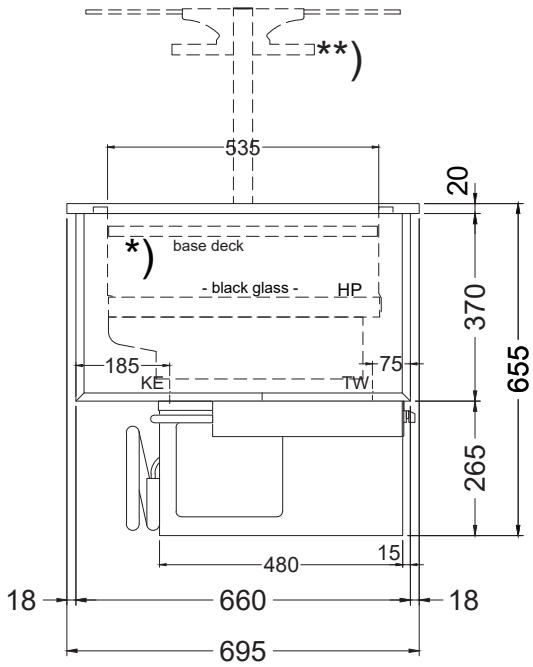

*) suitable for GN trays (max. depth 100mm)

**) optimal function garuanteed only in combination with hot sneeze guard(also see chapter "Heated display cases with dry heat"

LEGEND:
TW = Drain DNØ30
KE = Cooling/Electric
HP = hotplate

ACCESSORIES AND OPTIONS

Support bars for GN trays (UKW)	lengthwise bar, sideways, 530 mm	253 668	43,-
	lengthwise bar, middle, 530 mm	253 674	43,-
	Crossbar 325 mm	253 681	33,-
Electrical condensate evaporation tray	1000 Watt	190 220	809,-
Without installation frame		253 655	103,-

IDEAL Kältetechnik GmbH
In der Schörihub 28, 4810 Gmunden, AT
+43 7612 660 61
office@ideal-ake.at

AKE Ausseer Kälte- und Edelstahltechnik GmbH
Pichl 66, 8984 Bad Mitterndorf, AT
+43 3624 211 00
office@ake.at