KGU

GLASS ENCLOSURE ROUND

SELF-CONTAINED (remote refrigerated = w/o condensing unit)

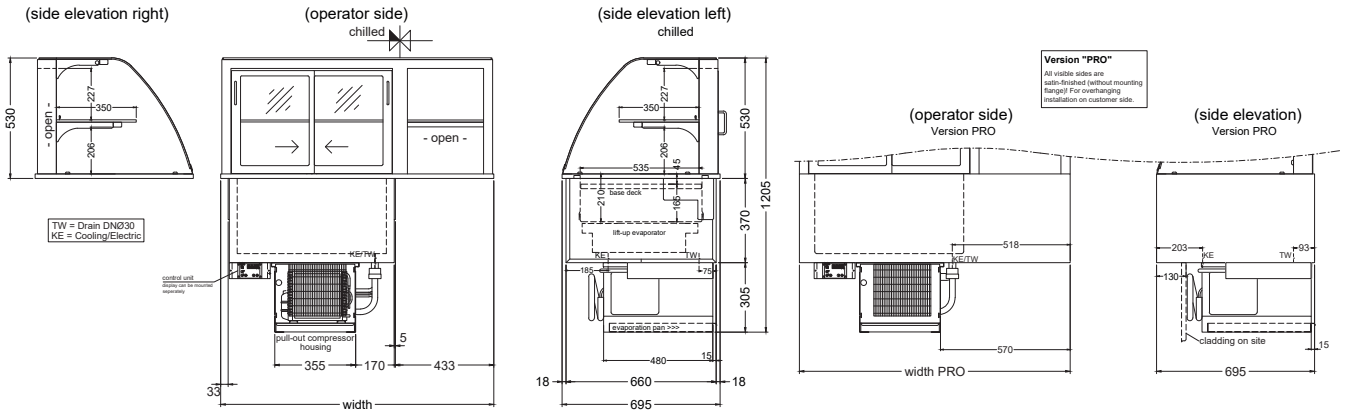

GLASS ENCLOSURE SQUARED

SELF-CONTAINED (remote refrigerated = w/o condensing unit)

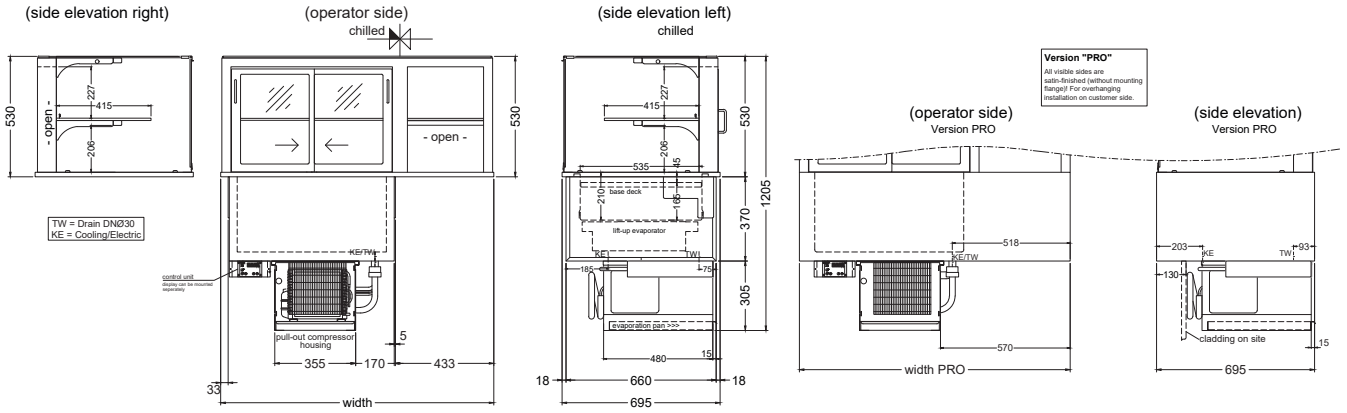

GLASS ENCLOSURE INCLINED

SELF-CONTAINED (remote refrigerated = w/o condensing unit)

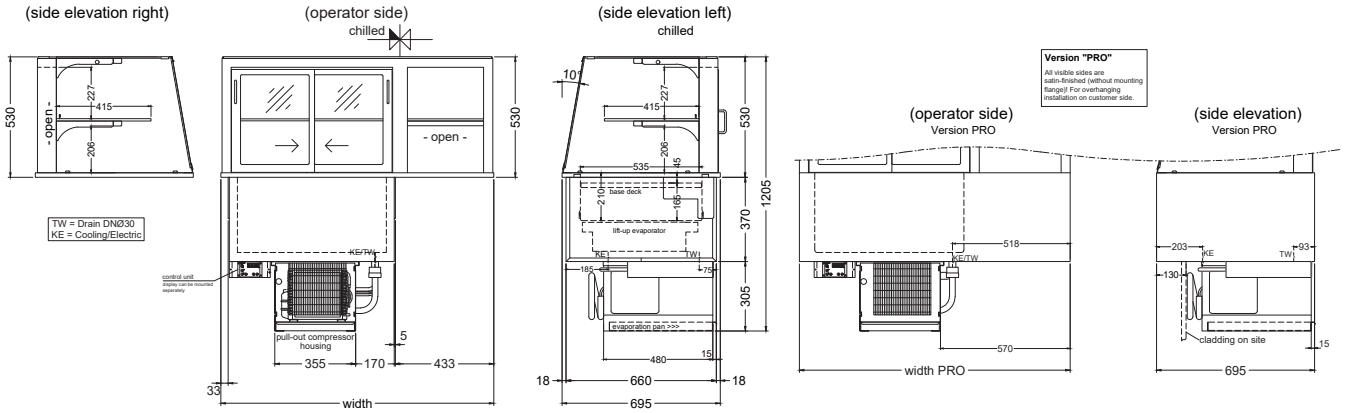

ACCESSORIES AND OPTIONS

Mirror-image design		surcharge		on request
Electrical condensate evaporation tray	300 Watt		190 215	328,-
Version with electronic expansion valve	for remote refrigerated models			on request
Flat inner well	(35 mm deep)			without surcharge
Price tag holders	per linear metre		303 899	70,-
Sliding doors in a mirrored design				on request
Without installation frame			253 655	103,-

IDEAL Kältetechnik GmbH
In der Schörihub 28, 4810 Gmunden, AT
+43 7612 660 61
office@ideal-ake.at

AKE Ausseer Kälte- und Edelstahltechnik GmbH
Pichl 66, 8984 Bad Mitterndorf, AT
+43 3624 211 00
office@ake.at

KGU

GLASS ENCLOSURE ROUND

SELF-CONTAINED (remote refrigerated = w/o condensing unit)

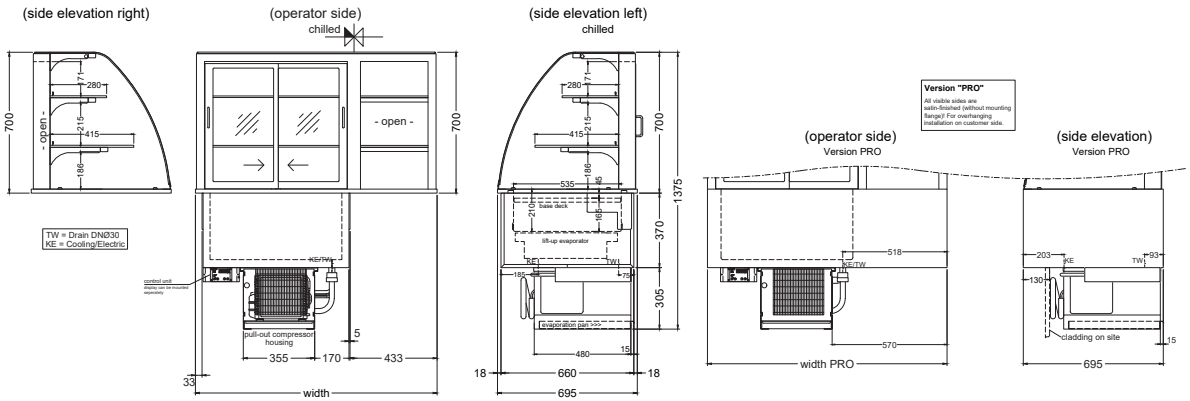

GLASS ENCLOSURE SQUARED

SELF-CONTAINED (remote refrigerated = w/o condensing unit)

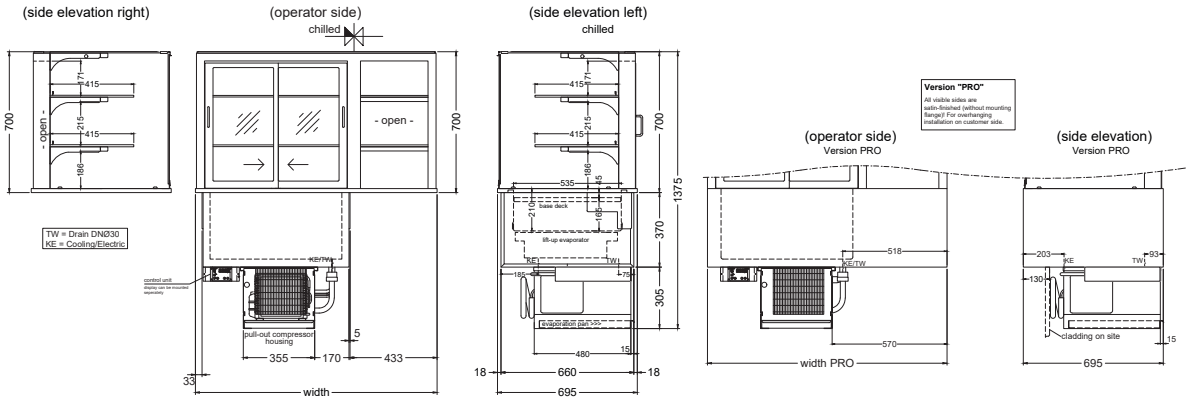

GLASS ENCLOSURE INCLINED

SELF-CONTAINED (remote refrigerated = w/o condensing unit)

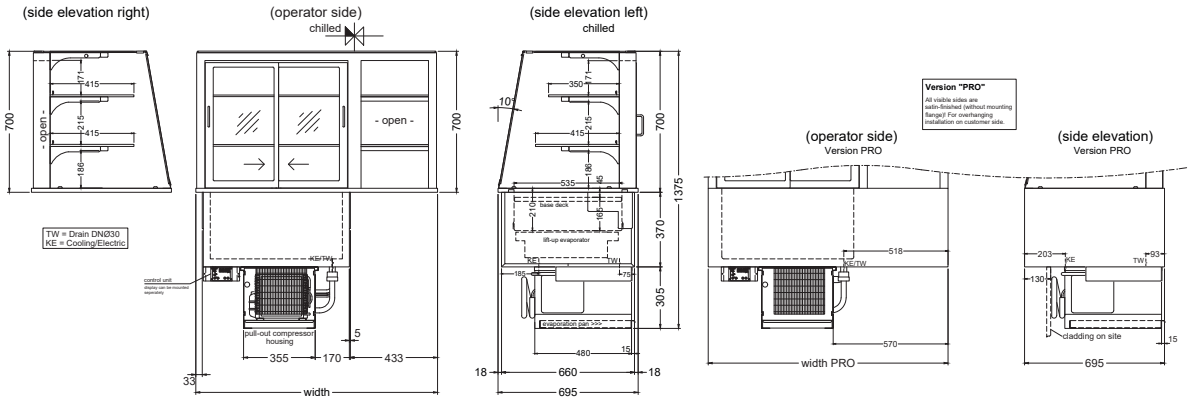

ACCESSORIES AND OPTIONS

Mirror-image design		surcharge		on request
Electrical condensate evaporation tray	300 Watt		190 215	328,-
Version with electronic expansion valve	for remote refrigerated models			on request
Flat inner well	(35 mm deep)			without surcharge
Price tag holders	per linear metre		303 899	70,-
Sliding doords in a mirrored design				on request
Without installation frame			253 655	103,-

IDEAL Kältetechnik GmbH
In der Schörihub 28, 4810 Gmunden, AT
+43 7612 660 61
office@ideal-ake.at

plus VAT | valid from 05/2022

AKE Ausseer Kälte- und Edelstahltechnik GmbH
Pichl 66, 8984 Bad Mitterndorf, AT
+43 3624 211 00
office@ake.at