V 1.1/2022/12

Translation of the Original

Operating manual

Refrigerated base EKP and GN
Self- and centrally cooled

IDEAL AKE

Notes on this Operating manual

Follow these instructions for proper and safe use.

Keep for future reference.

Operating and assembly instructions

Copyright©2022

IDEAL Refrigeration GmbH
In the Schörlhub 28
4810 Gmunden
+43 7612 66061
www.ideal-ake.at

All rights reserved.
We reserve the right to make changes in the sense of technical improvements.
This documentation is the translation of the original documentation.

Table of contents

Notes on this Operating manual 2

1. General information 5
   - 1.1. Information requirements after 2019/2024,2019/2015 5
   - 1.2. Scope 6
   - 1.3. Warranty and liability 6
   - 1.4. Symbols and signal words used 7
   - 1.5. Target group and previous knowledge 8
2. Security 9
   - 2.1. General safety instructions 9
   - 2.2. Special safety instructions for appliances with propane refrigerant 9
   - 2.3. Personal protective equipment 10
   - 2.4. Residual risks 10
3. Technical data / layout 12
   - 3.1. Type plate and technical data 12
   - 3.2. Layout 13
   - 3.3. Intended use 14
   - 3.4. Use not in accordance with the intended purpose 15
   - 3.5. Foreseeable misuse 15
4. Transport, handling and storage 16
   - 4.1. Shock Watch 16
   - 4.2. Storage 16
5. Assembly, installation and commissioning 17
   - 5.1. Installation site 17
   - 5.2. Supply connections 18
   - 5.3. Defrost water connection 18
   - 5.4. Operating connections 19
   - 5.5. Commissioning 20
   - 5.6. Switch on the unit 20
   - 5.7. Key assignment and control element 21
6. Operation 22
   - 6.1. Settings 22
   - 6.2. Stocking with goods 23
     - 6.2.1. Gastronorm interior 24
     - 6.2.2. Inserting bottle dividers 25
     - 6.2.3. Stacking limit 25
   - 6.3. Decommissioning 26

7. Cleaning and maintenance 27
7.1. Cleaning in general 27
7.2. Grease filter and condenser cleaning 28
7.2.1. Clean grease filters for GN 28
7.2.2. Cleaning the condenser on EKP without grease filter 28
7.3. Emptying and cleaning the condensation tray 29
7.3.1. Dismantling the drawers and guide rails type A 30
7.3.2. Disassembly and cleaning of the guide rail type A 31
7.3.3. Cleaning cutting board for saladettes 32
7.3.4. Cleaning hygiene plate 32
7.4. Maintenance 32
7.5. Maintenance table 33
8. Malfunction 34
8.1. Refrigeration unit does not work 34
8.2. Goods do not reach desired temperature 34
8.3. Evaporator ices up constantly 34
8.4. Alarm and error message on the control element 35
9. Parts overview / Spare parts 36
9.1. Parts overview 36
9.2. Spare parts 37
9.3. Support 37
9.4. Further contact details for enquiries 37
10. Waste disposal / energy saving 38
10.1. Disassembly 38
10.2. Disposal 38
10.3. Tips for saving energy 39
11. Appendix 40
11.1. List of figures 40
11.2. List of tables 40

1. General information

These operating instructions describe the installation, operation and maintenance of the unit, are part of the scope of delivery and only apply to the unit types listed.

Knowledge of all the safety instructions and handling instructions contained in it is a prerequisite for safe and proper work with the unit.
The local accident prevention regulations and general safety regulations applicable to the area of use of the unit must be observed.
The operating instructions are an integral part of the product and must be kept in the immediate vicinity of the unit so that they are accessible at all times to the installation, operating, maintenance and cleaning personnel.

If the unit is passed on to third parties, the operating instructions must also be handed over.

The unit has been built according to the currently valid rules of technology. However, dangers may arise from this appliance if it is used improperly or not as intended.
Knowledge of the contents of the operating instructions is one of the prerequisites for protecting yourself from hazards and avoiding errors, and thus for operating the unit safely and without malfunctions.
To avoid hazards and to ensure optimum performance, no modifications or conversions may be made to the unit that have not been expressly approved by the manufacturer.
The unit may only be operated in a technically perfect and operationally safe condition.
For our declaration of conformity for self-cooled units or installation declaration for centrally cooled units, please visit our online product catalog: https://shop.ideal-ake.at/en/

1.1. Information requirements after 2019/2024,2019/2015

The information provided is for information requirements under Regulation (EU) 2019/2024- Annex II, 3:

Table 1: Information requirements

a.	The temperature has been set at the factory for each appliance according to specified technical requirements to ensure optimum food storage. These settings should be maintained.
b.	Changes to the temperature settings can lead to spoilage of the goods brought in.
c.	See chapter 3.3
d.	See chapter 3.3
e.	See chapter 5 and chapter 7
f.	If the condenser coil is not cleaned 1x per year, this leads to a considerable reduction in the efficiency of the unit.
g.	See chapter 9
h.	See chapter 9
i.	See chapter 9
j.	See chapter 9
k.	See chapter 9

1.2. Scope

These operating instructions apply to the following models:

Refrigerated base Gastro GN: KTE/KTZ
Baking Standard EN: BKE/BKZ/UBKE/UBKZ
Beverage refrigerated counters: A/AF/AR/AL/AFR/AFL/B/BR/BL
Slide-in cooling desks: UBE/UBZ/UBA/TKE/TKZ/UTKE/UTKZ
Counters: BLGE/BLGZ
Saladettes: SE/SZ

1.3. Warranty and liability

Our general payment and delivery conditions apply, which you can find in our general terms and conditions at:
www.ideal-ake.at

Entitlement to warranty and liability is forfeited by:

- Improper use of the appliance.
- Non-conforming installation, commissioning, operation and maintenance of the unit.
- Operating the appliance with defective safety components or safety components that have not been properly installed and are not operational.
- Failure to comply with the information in the operating instructions regarding installation, commissioning, maintenance, assembly and transport of the appliance.
- Unauthorised mechanical or technical modifications to the unit.
- Insufficient maintenance and cleaning of the working and wearing parts.
- Proven misadjustment of the refrigeration control by an unqualified person.
- Use of aggressive or corrosive cleaning agents.
- Acts of nature and force majeure.

NOTE

If malfunctions occur, switch off the unit and contact your supplier or the manufacturer immediately.

1.4. Symbols and signal words used

In these operating instructions, the following designations and symbols for hazardous situations are used in accordance with the harmonisation of ISO 3864-2 and ANSI Z535.6.

Table 2: Symbols used in Operating Instructions

	Danger indicates a hazardous situation which, if not avoided, will result in death or serious injury.
	Warning indicates a hazardous situation which, if not avoided, may result in death or serious injury.
	Caution indicates a hazardous situation which, if not avoided, may result in minor or moderate injury.
NOTE	Indication of a situation that could cause property damage.
	Recommendation to ensure efficient and trouble-free operation of the unit.
	Warning of electrical voltage
	Warning of flammable substance Propane R290
	Follow instructions
	Skilled person required
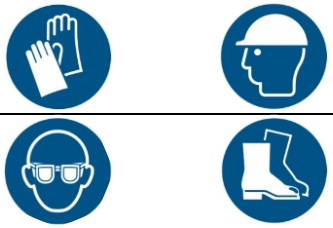	Use personal protective equipment
	Do not dispose of the appliance with household waste separately from other waste in accordance with the applicable regulations 2012/19/EU WEEE.
	Air temperature: Defines the temperature inside the cooling unit.
	Product temperature: Refers to the core temperature of the product.
	Room temperature: Defines the ambient temperature of the room in which the unit is to be placed.

Table 3: Symbols on the unit

	Warning of electrical hazards.	On the unit next to the danger zone.
	Warning against hot surfaces	On compressor/condenser and next to hot gas line
	Warning against flammable substances.	In places filled with propane (R290).
	Obligation to read the operating instructions.	On the display of the control unit and on the insertion pocket for the operating instructions
	Protective earthing	Next to protective earth connection.
	Nozzle used	On the unit next to the corresponding nozzle
	Correct disposal of the appliance.	Do not dispose of the appliance with household waste separately from other waste in accordance with the applicable regulations 2012/19/EU WEEE.

1.5. Target group and previous knowledge

These operating instructions are intended for operating personnel in the catering and trade sectors, as well as for installation and maintenance personnel.

The unit may only be operated by trained personnel to be determined by the operator.

- It is essential that you observe the locally applicable trade and safety regulations.
- Reading and understanding this documentation is a prerequisite for safe operation.
- Only skilled personnel authorised by the manufacturer may carry out maintenance and repair work.
- Only instructed personnel may operate and clean the appliance.
- This appliance can be used by children aged 14 years and above and persons with reduced physical, sensory or mental capabilities or lack of experience and knowledge if they have been given supervision or instruction concerning use of the appliance in a safe way and understand the hazards involved. Children must not play with the appliance. Cleaning and maintenance must not be carried out by children without supervision.
- Assembly, maintenance and repair work may only be carried out by competent and authorised personnel.

2. Security

2.1. General safety instructions

This section provides an overview of all important safety aspects.

This section provides an overview of all important safety aspects. In the individual chapters, specific safety instructions for avoiding dangers are given and marked with symbols.

The pictograms, signs and labels on the unit must be observed and kept in a legible condition at all times. Observance of all safety instructions provides optimum protection against hazards and ensures safe and trouble-free operation of the unit.

In general, the following safety regulations apply when handling the unit:

- Covers with warning labels may only be opened by specialists.
- Protective covers and devices must not be removed, otherwise there is a risk of injury.
- The underside and back of the unit must not be cleaned with a water jet.
- The unit is not suitable for operation in entrance and outdoor areas.
- The unit must be adequately covered during assembly or installation so that no contact with live parts is possible.
- When refilling refrigerant, only the refrigerant specified on the type plate may be used.
- Pushing and moving the units is not permitted, units must be lifted for transport or rearrangement.
- Do not put hot ashes or other flammable materials into waste tippers.

2nd2nd Special safety instructions for appliances with propane refrigerant

Observe the following rules for safe use:

- Only skilled and authorised personnel may carry out assembly, maintenance and repair work.
- According to EN 378-1, the room volume at the installation site must be at least 1 m³ per 7.6 g refrigerant.

  Example: Filling quantity 149 g results in 20 m³ room volume.
- Avoid sparks, open flames and other sources of ignition.
- Before maintenance and repair work, ventilate the installation area well - only use non-sparking tools.
- Take measures against electrostatic charge.
- Do not store or operate electrical appliances such as electric knives or meat grinders and the like that are not designed to be explosion-proof.
- Do not remove any warning labels on the unit.
- Components and operating materials may only be replaced by original parts.

NOTE

Units with the natural refrigerant propane (R290) must be installed in an environment safe to the requirements of the directive. Only electrical equipment approved by the applicable ATEX directive may be used inside the unit. The operator must ensure that this is the case.

2.3. Personal protective equipment

All persons shall ensure that they use protective equipment appropriate to the activities:

Wear safety shoes during assembly, transport and maintenance activities.

Wear eye protection when disposing of the refrigerant and damaged parts/components.

Wear suitable protective gloves during assembly, transport and maintenance activities as well as during cleaning activities and disposal.

Wear a safety helmet during transport and assembly activities.

2.4. Residual risks

Even if the utmost care is taken in the design and construction of the equipment and all safety-relevant facts are taken into account, residual hazards may still exist, which are evaluated by means of a risk assessment.

WARNING

Danger of crushing and falling objects when handling/adjusting/positioning heavy individual components.

When handling heavy objects, be aware of possible crushing hazards, also for third parties. If possible, use both hands when handling heavy objects. If necessary, enlist the help of another person. Wear protective gloves and safety shoes when handling/adjusting/positioning heavy individual components.

WARNING

Danger from leaking refrigerant due to a damaged evaporator

Do not use sharp objects to clean the evaporator fins. The evaporator fins may only be cleaned with products specified by the manufacturer.

WARNING

Electrical hazard

Make sure that the mains connection cable of the units is not damaged. If it is damaged, it must be replaced by the distributor or its customer service in order to avoid hazards.

WARNING

Risk of ignition due to sparks generated by electricity or friction and hot surfaces.

With refrigerant propane R290, explosive gas-air mixtures can arise as a result of possible leaks in the refrigeration system. Accidental ignition is possible due to the spark of a vacuum cleaner or other electrical appliance. No hot surfaces may be present or generated. Only use equipment that complies with the valid ATEX directive for cleaning, maintenance and servicing activities!

CAUTION

Danger of slipping due to condensation water escaping and leaking at leaks

In the area of the unit, pay attention to possible slipping hazards due to leaking liquids. During installation, make sure that the siphon is fitted properly and is tight.

CAUTION

Risk of impact on the units during assembly, cleaning and maintenance activities.

Watch out for possible shock hazards on the unit.

CAUTION

Danger of burns on the units during assembly, cleaning and maintenance activities.

Watch out for possible hot surfaces on the unit.

3. Technical data / layout

3.1. Type plate and technical data

The type plate is located on the side in the unit compartment near the cable outlets or behind the electrical and control connection box. Always refer to the type plate for concrete technical specifications.

Figure 1: Example nameplate

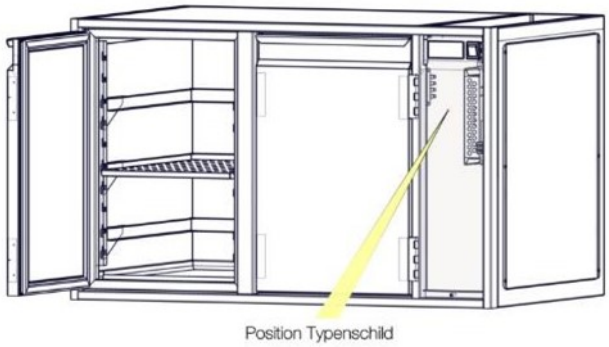

Figure 2: Position of type plate

Table 4: Information on the type plate

Information on the type plate	Information
IDEAL	Manufacturer
TYPE	Unit designation
Serial no.	Serial number of the unit
220-240V AC~50Hz	Rated voltage at specified mains frequency
Max. Connected load	Maximum connected load in watts
Cooling capacity	
Refrigerant / refrigerant mass	Refrigerant for cooling / specification ex works only possible for self-cooled units, filling of centrally cooled units takes place on site.
CO2e/GWP	Global Warming Potential
Climate class	Climate class according to DIN EN ISO 22041
13A	Backup fuse
Permissible operating pressure	Depending on refrigerant
Protection class	I / Protective earthing
Protection class display	IP protection class according to EN 60529
Sound pressure	Sound pressure level
CE	Mark of conformity
	Electrical or electronic equipment that must be disposed of separately in accordance with Directive 2012/19/EU WEEE.

3.2. Layout

Figure 3: Layout

Table 5: Layout parts

Position	Designation
1	Drawer sheet
2	Installation compartment (centrally cooled) Machine compartment (self-cooled, with unit louvre)
3	Side maintenance cover
4	On/Off switch
5	Control element
6	Worktop optional
7	Door leaf
8	Optional adjustable feet, castors or plinth

3.3. Intended use

Refrigerated base units are designed for installation in catering kitchens for cooling food, with or without the use of gastronorm trays or baking standard trays. The units are designed in accordance with climate class 4 to 5 to DIN EN ISO 23953.

Temperature ranges:

- Gastronorm refrigerated counters:
  Adjustable set point is between -2°C and +8°C

-2°C to +8°C	M1: -1 °C to +5 °C	Climate class 4: 30 °C / 55 %rh

- Gastronorm freezer tables:
  Adjustable set point is between -18°C and -22°C

-18°C to -22°C	L1: -15 °C to -18 °C	Climate class 4: 30 °C / 55 %rF

- Baking norm, saladette cooling tables and loading stations:
  Adjustable set point is between +2°C and +10°C

2°C to +10°C	M2: -1 °C to +7 °C	Climate class 4: 30 °C / 55 %rh

- Slide-in cooling desks, beverage cooling desks
  Adjustable set point is between +2°C and +10°C

2°C to +10°C	M2: -1 °C to +7 °C	Climate class 4: 30 °C / 55 %rh

NOTE

All specifications such as ambient temperature, temperature ranges and nature of the manufacturer's installation environment for the respective unit type must be strictly adhered to.

3rd4th Use not in accordance with the intended purpose

The cooling units are not suitable for cooling down food. They must not be filled with food that has a much higher temperature than the set internal temperature of the refrigeration base.

WARNING

Technical modifications to the cooling unit may only be carried out by specialists. This applies in particular to work on the cooling technology, electrical installations and mechanics. Any modification must be authorised by the manufacturer.

3.5. Foreseeable misuse

- Do not fill with goods that have a higher temperature than the set internal temperature.
- Do not store pharmaceutical products.
- Do not store flammable or explosive items such as petrol or adhesives.
- Do not operate the refrigeration units near heat- or steam-generating appliances to avoid damage to compressors or temperature control problems in the refrigeration area.
- The maximum stacking limit must not be exceeded.
- Outlet openings must remain free.
- Neither the refrigeration units nor parts of them may be used as a climbing aid.
- Do not block or cover any openings, food must not touch the walls of the refrigeration unit or block doors.

4. Transport, handling and storage

- The refrigerated units are transported on pallets, secured by strapping.
- Units with glass components are transported in a wooden enclosure.
- Check the delivery for completeness and transport damage upon receipt.
- Note any transport damage on the transport documents and have them confirmed.
- Immediately complain about hidden defects to your supplier by telephone or in writing.
- If transport damage is not reported in due time, the claim for damages expires.

NOTE

All units are to be transported and stored only in the position of use. Handle units with refrigerant with care and observe the safety instructions.

4.1. Shock Watch

- Units with glass content are packed in wooden crates and fitted with ShockWatch indicators for damage monitoring.
- This indicator allows to determine at which point in the supply chain a product has been damaged in order to clarify transport damages.

Figure 4: ShockWatch indicator

4.2. Storage

Keep packages closed until installation and observe the installation and storage markings on the outside.

Store packages only under the following conditions:

- Do not store outdoors.
- Store in a dry and dust-free place.
- Do not expose to aggressive media.
- Protect from sunlight.
- Avoid mechanical shocks.
- In case of longer storage (> 3 months), regularly check the general condition of all parts and the packaging and refresh or renew if necessary.

5. Assembly, installation and commissioning

5.1. Installation site

- Unpack the unit and remove all packing material.
- Remove the protective film.
- Place the unit on a level surface, the load-bearing capacity of the surface must be large enough to support a fully loaded unit.
- DO NOT place the appliance near a heat source and avoid direct sunlight.
- Make sure that the room is well ventilated.
- When installing in compound systems, ensure that the side maintenance cover and the machine compartment remain easily accessible for maintenance and cleaning work.
- The refrigeration unit is not suitable for installation in swimming pools, indoor pools or thermal baths unless the installation location is hermetically separated from the swimming area.

  Exception: design in higher stainless steel quality.
- Align the refrigeration unit horizontally to allow the condensation to drain off.
- According to EN 378, the installation room of the refrigeration unit must have a volume of 1m³ per 8g refrigerant quantity.

Please also note the following for self-cooled units:

- Do not turn the appliance over or tilt it more than 45° to avoid compressor malfunctions.
- Ventilation grilles of claddings must be at least one and a half times the cross-section of the condenser of the unit and have the largest possible openings.

NOTE

Do not cover the ventilation openings of the cooling unit, overheating will destroy the unit.

You can find installation instructions as a download online with the corresponding unit at:

https://shop.ideal-ake.at/en/product-catalog/

shop.ideal-ake.at/ersatzteilshop

5.2. Supply connections

In the case of self-cooled units, the pipes are permanently connected to the refrigeration unit and the refrigeration circuit is filled with refrigerant. The unit is supplied as standard with a 1.5 metre long connection cable with earthing contact plug. The unit is connected to an AC mains supply of 230Volt/50Hz (country-specific, see type plate). The plug must be easily accessible so that the unit can be quickly disconnected from the mains if necessary.

Centrally cooled units are intended for on-site connection to a compound cooling system. The specified evaporator temperatures and the condensing temperatures must be kept constant. In the case of direct cabling, a possibility must be provided to disconnect the unit from the mains if necessary.

NOTE

Units without their own cooling unit may only be installed by a refrigeration specialist.

Specialised personnel are not absolutely necessary for self-cooled units.

5.3. Defrost water connection

In the case of self-cooled units, the condensation water is evaporated via the waste heat from the unit.

Self-cooled units with built-in bottle coolers or built-in saladettes and centrally cooled refrigeration units must always be siphoned and connected to the on-site waste water system.

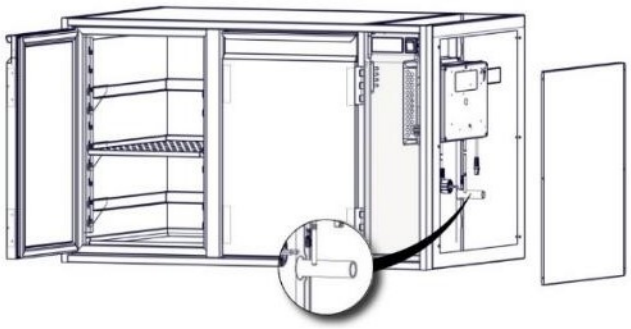

Figure 5: Condensation water connection

If a siphon cannot be installed as an odour trap due to the installation height, a drain hose that is bent like a siphon can be installed.

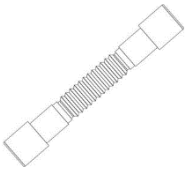

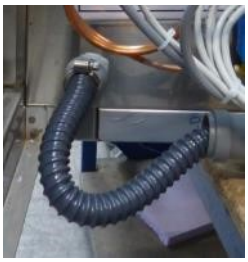

Figure 6: Odour closure

5.4. Operating connections

The installed refrigeration system shall be put into operation, a function and safety check shall be carried out and the report shall be handed over to the operator.

DANGER

Danger due to electrical voltage on live components

The electrical connection must be carried out by an authorised specialist and comply with the applicable standards, regulations and safety provisions.

- Connect the unit to an AC mains supply with a rated voltage of 220-240 V / 50 Hz.
- Fuse the supply line with max. 13 A(slow-blow).
- The use of a residual current circuit breaker with a rated residual current of max. 30 mA is recommended.
- For units with flammable refrigerants such as propane R290, the electrical connection cable may only be connected to the mains outside the unit at a distance of at least 1 metre.
- The possibility of safely disconnecting the unit from the mains must be ensured.
- For plug connections to the mains, the socket used must be easily accessible.
- For deviating specifications, please refer to the type plate.

Connection for self-cooled refrigeration units:

1. The connection cable is located in the machine compartment for transport.
2. Open the side maintenance cover by removing the 6 fixing screws.
3. Guide the connection cable on the rear wall through the opening provided to the outside.
4. Replace the maintenance cover and fix it with the screws provided.

Connection for centrally cooled refrigeration units:

Depending on the local conditions, the refrigeration unit is connected to the central refrigeration system by a refrigeration engineer. For optimum access in the event of a malfunction, the customer must ensure that the refrigeration installation is easily accessible.

NOTE

Solenoid valves, filter dryers and, if necessary, suction pressure regulators must be installed on site.

5.5. Commissioning

The unit was pre-cleaned in operation after manufacture. Before commissioning, clean the unit again with a suitable cleaning agent to remove any impurities that may have arisen.

Wait approx. 2 hours after setting up the unit before starting it up, so that the refrigerant can be evenly distributed in the refrigerant circuit again. (Only for self-cooled units)

- Make sure that the installation compartment and the maintenance cover are securely closed on all sides.
- During the first few hours of operation, centrally cooled refrigeration units may produce a small amount of smoke from the heating elements during the defrosting process. This process is completely harmless.

5.6. Switch on the unit

- Press the on/off switch to switch on the unit.
- Then press the button at the top right (button 6) on the control to start cooling operation.
- Set the date and time to ensure correct HACCP recording.
- The digital display of the refrigeration controller shows the ACTUAL temperature and any error messages.
- In the unfilled state, it can take up to three hours after switching on the unit until the factory-set temperature is reached. When filled, this process can be extended to up to 24 hours (depending on the ambient conditions).
- The control unit of the unit is located in the machine/installation compartment. The control parameters on it, with the exception of the temperature control, may only be changed by a refrigeration specialist.

NOTE

If the appliance is switched off and on in succession, it will take one minute for the refrigeration unit to start operating for safety reasons.

5.7. Key assignment and control element

Table 2: Key assignment

KEY	DESIGNATION	FUNCTION
1	AT	Increase value Select menu item or raise shutter
2	AB	Reduce value Select menu item or lower shutter
3	OK	Save settings/changes; acknowledge alarm; setpoint adjustment: press 2 seconds
4	MENU/EXIT	Machine settings; close menu item
5	LIGHT	Light on (LED lights up); light off, 4seconds hold available for dimming (depending on model)).
6	ON/OFF/STANDBY	ON -LED lights up green; OFF -LED lights up red Standby: Press the button for 4 seconds

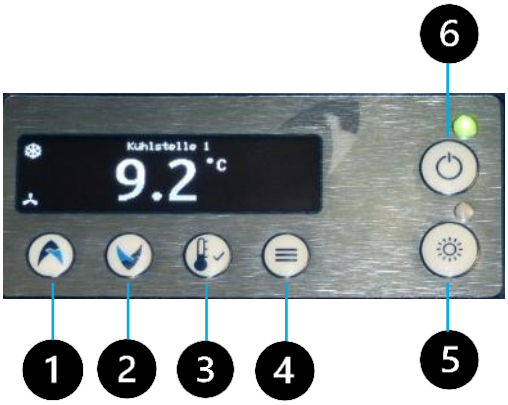

Table 3: Symbols on the display

SYMBOL	DISPLAY	MEANING
6°C	Large display	Current temperature value
5	Small display	Core temperature of the goods
°C	Degree Celsius	°F, adjustable by service
	Permanent light	Cooling/heating running
	Flashing	Cooling/heating demand, switch-on delay countdown
		Evaporator fan running
	Permanent light	Defrosting in progress
	Flashing	Countdown of the switch-on delay
	Display on change	Saving takes place after exiting the menu
		USB stick recognised
a		Reference to completed alarm message

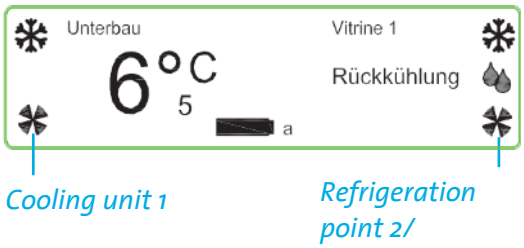

6. Operation

6.1. Settings

Set the temperature setpoint:

1. Press and hold the OK button for 2 seconds, asset 1 flashes.
2. Increase the temperature with the UP button, reduce the temperature with the DOWN button.
3. Confirm the changes with the OK button.
4. if present, refrigeration point 2 starts flashing.

Stand-by operation:

1. Press and hold the ON/OFF button for about 3 seconds to put the unit into standby mode.
2. If there are several active refrigeration points, a selection appears via the UP to MENU keys:
3. The UP key deactivates refrigeration point 1, the DOWN key deactivates refrigeration point 2, the OK key deactivates refrigeration point 3 and the MENU key deactivates all refrigeration points.
4. To switch on again, proceed in the same way.

Device settings:

1. Press the MENU button to enter the submenu:
2. Press the UP key or DOWN key to select the corresponding menu item.
3. Press the OK button to open the desired menu item.
4. The value with a white background can be changed by means of the UP/DOWN button or
5. Another submenu is displayed.
6. Confirm the entry with the OK button

Pressing the MENU key closes the menu item, the change is only saved if confirmed beforehand with the OK key and the settings menu has been completely closed by pressing the MENU key several times.
After 30 minutes without input, the display returns to normal operating mode.

Pressing the MENU button takes you to the following settings:

- Set point
- Actual value
- Alarm
- Error messages
- Maturation process
- Date/Time
- Light
- Night blind
- Defrost
- Operating hours counter
- Service indicator
- Condenser cleaning
- Settings
- Version

6.2. Stocking with goods

The appliance is designed to maintain the temperature of pre-cooled goods. It is not suitable for cooling goods. Loading goods that are too warm will cause it to take a considerable time for the operating temperature to drop to the set value. During this time, the prescribed minimum storage temperatures may be exceeded.

Gastronorm: The interior is designed for the storage of packaged and unpackaged food, with the exception of seafood, in particular mussels.

Seafood, fish and shellfish must be stored on ice in gastronorm trays in the refrigerated cabinet; direct contact with the stainless steel surface may cause corrosion. Exception: Version in higher stainless steel quality.

Beverage refrigerated counters: The interior is designed for the storage of beverages. Short-term storage of vacuum-packed food or food packed in tightly sealed containers is possible.

Freezer counter: The interior is designed for packed food.

NOTE

Unpackaged, acidic food damages the stainless steel surface and refrigeration components in the interior

To be observed during placement:

Make sure that the goods are not too close to the air openings of the evaporator and prevent optimal cooling of the goods.

The interior temperature of the unit reacts much more sensitively to temperature changes than the stored goods.

When storing products that have not been sufficiently pre-cooled, the thermometer shows the desired temperature, but the stored goods have not yet reached it.

- Do not completely close the circulation openings of the shop baskets with goods.
- Do not overfill the gastronorm trays, especially in the area of the evaporator outlet openings.
- Maximum load between shelves: 50 kg
- Maximum load on drawer: 45 kg

NOTE

When loading drawers, ensure that an air gap of 20mm to the top edge of the drawers is maintained to ensure optimum air circulation.

6.2.1. Gastronorm interior

Table 4: Gastronorm interior fittings

Figure	Designation	Use	Device
	Gastronorm bowl	Storage of goods, available in various standardised sizes from your specialist dealer	Universally applicable, in particular for saladettes, loading stations, etc.
	Longitudinal web	Enables the use of different gastronorm tray sizes or to secure trays against slipping.	Saladettes and loading stations
	Crossbar	Enables the use of different gastronorm tray sizes or to secure trays against slipping.	Saladettes and loading stations
	Shop divider	Enables the use of different gastronorm tray sizes or to secure trays against slipping.	For Gastronorm drawers
	Bottle separator	For separating in shop baskets, Prevents bottles from slipping in shop baskets	For Gastronorm drawers
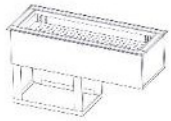	Built-in cooling trough	For cooling bottles and the like	For installation in beverage counters

- When inserting the longitudinal and cross braces, make sure that they are correctly inserted into the slots of the support frame and the longitudinal braces using the tabs provided.

Figure 7: Saladette _Bridges

- For counters and built-in cooling trays, position the longitudinal bars at a 90° angle to the support frame to prevent them from falling down.

Figure 8: Counter_Station_bridges

6.2.2. Inserting bottle dividers

The bottle dividers are designed with two different ends:

- The groove of end B is recessed to allow insertion.
- End A corresponds to the diameter of the divider bar to ensure a secure fit in the drawer.

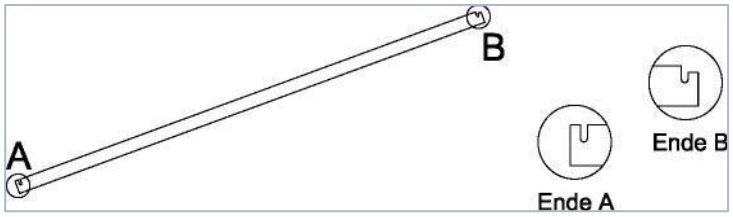

Figure 9: Bottle separating rods

1. First place the bottle separating rod with end A in a slightly inclined position (approx. 45°) with the slotted recess facing upwards into one of the pre-punched holes on the side.
2. Move end B to an approximately horizontal position.
3. Press the side wall of the drawer slightly outwards and then insert end B into the opposite hole.
4. To remove or replace the bottle separator rods, proceed in reverse order.

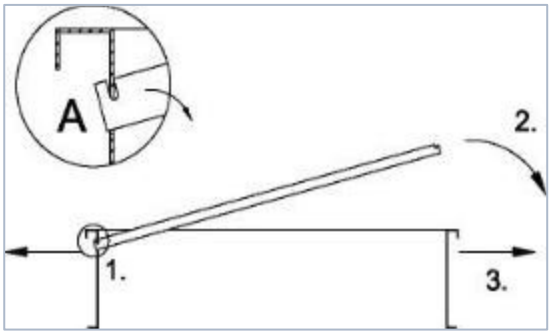

Figure 10: Insert bottle separator rods

6.2.3. Stacking limit

Observe the stacking marks in the refrigeration units to ensure proper air circulation and even temperature distribution in the interior.

The maximum filling height for drawers is the top edge of the drawer leaf minus 2 cm.

In the interior of the refrigerator unit, a minimum distance of 2 cm to the interior ceiling of the unit and 3.5 cm to the bottom of the unit must be maintained.

Stack mark:

Figure 11: Stacking mark

6.3. Decommissioning

DANGER

Danger due to electrical voltage on live components

THE APPLIANCE IS ONLY DE-ENERGISED WHEN THE MAINS PLUG IS REMOVED FROM THE SOCKET.

- Cooling mode is set by pressing the ON/OFF button.
- Pull the mains plug out of the socket to take the appliance out of operation.
- During the interruption of operation, open the doors to ventilate the refrigeration unit.
- Remove refrigerated goods from a refrigerated cabinet that is not in operation.
- Before taking the appliance out of operation for a longer period of time, disinfect the interior.
- Make sure that the unit cup, located at the bottom of the machine compartment below the unit, is not filled with water.
- If necessary, remove the liquid with a sponge or cloth. (Applies only to self-cooled units).
- Before recommissioning, check the interior for mould.
    - It is recommended to disinfect again

NOTE

If the unit has been idle for a very long time, a maintenance technician must be called in for commissioning to ensure a smooth resumption of operation.

7. Cleaning and maintenance

It is essential to carry out the following cleaning and maintenance operations to ensure the long-lasting performance of the appliance.

The unit must be cleaned daily inside and out in accordance with hygiene regulations to guarantee optimum storage of goods.

DANGER

Danger due to electrical voltage on live components

Before cleaning the appliance, disconnect the power supply - 2-pole disconnect the appliance from the mains or unplug the mains plug.

NOTE

Cleaning agents used must be free of chlorine, ammonia and ammonia to avoid corrosion of the stainless steel surfaces.

Wear protective gloves during cleaning work to avoid injuries and skin irritations.

7.1. Cleaning in general

After cleaning with special cleaner, clean all parts of the appliance with clear water to avoid residues.

Always keep the stainless steel surfaces clean.

Never bring the surfaces into contact with rusty materials.

Plexiglas will become scratched and cloudy if abrasive materials and cleaning agents are used.

Table 8: Cleaning table

Component	When	Cleaning agents	Note
Surfaces	Daily	Stainless steel care products	Use a food-grade cleaner.
Fronts	Daily	Stainless steel care products	Use a food-grade cleaner.
Glass panes / shelves	Daily	Glass cleaner	Ammonia-free glass cleaner
Plexiglas components	Daily	Soapy water	
Interior	Weekly/when soiled	Soapy water	Rinse with clear water.
Door seals	Weekly	Soapy water	Rinse with clear water.
Condenser - only for self-cooled units	Weekly	Soft brush	Follow instructions
Drain lines	Monthly	Soapy water	
Condensation tray	Weekly	Soapy water	

NOTE

For freezer counters: Check the defrost water tray weekly for ice formation and defrost the unit manually at regular intervals to prevent the drain pipe of the defrost water tray from icing up.

Cleaning agents

Soapy water:

Use only lukewarm soapy water for all surfaces that come into direct contact with the fabric.

Stainless steel cleaner:

For stainless steel surfaces, use commercially available stainless steel cleaner.

Finishing the cleaning work

- Return the unit to ist original condition.
- Check that all screws are tight.
- After completion of the cleaning, all safety components must be checked for proper function.

7.2. Grease filter and condenser cleaning

Weekly cleaning is recommended for safe, trouble-free operation.

7.2.1. Clean grease filters for GN

It is not necessary to switch off the appliance when cleaning the grease filter.

1. Slide the grease filter of the machine compartment upwards by the handle provided.
2. Pull the grease filter out towards the front.
3. Clean the grease filter under running water or in the dishwasher.
4. Replace the filter in reverse order.

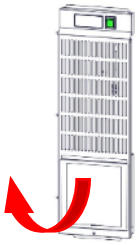

Figure 12: Cleaning the grease filter

7th2nd2nd Cleaning the condenser on EKP without grease filter

For self-cooled units:

Before cleaning the appliance, disconnect the power supply or switch off the appliance with the main switch.

1. Loosen the screw from the unit compartment cover and remove the cover.
2. Clean the slats carefully with a soft hoover brush attachment or similar.

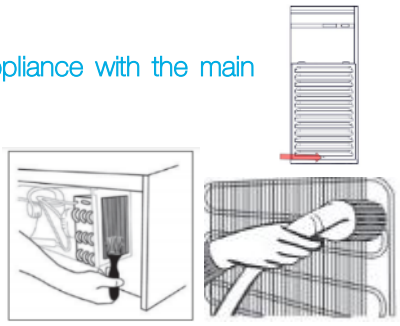

Figure 13: Clean condenser

NOTE

Make sure that the fins of the condenser are not bent. This impedes the heat exchange and affects the performance of the cooling unit.

Open the side maintenance opening and the installation compartment only for maintenance and cleaning.

7th3rd Emptying and cleaning the condensation tray

EKP slide-in cooling desks:

Check the condensation tray drain regularly and flush it with hot water.

1. Remove the interior fittings.
2. Remove the cover.
3. Check and clean the condensation tray.

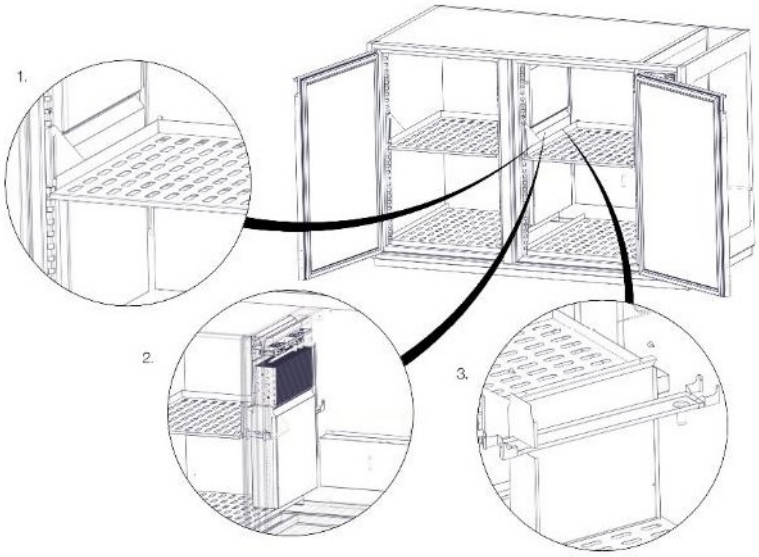

Figure 14: **Position of condensation water tray**

Cooling desks GN/BN:

Clean the condensation tray under the evaporator regularly:

1. Remove the air baffle above the tray. (Only for units with centre evaporator and EKP with overall height 815mm and 865mm).
2. Lift up the front of the tray.
3. Move the tray to the side and pull it out to the front.
4. Clean the bowl and put it back in place.
5. Make sure that the drain socket engages correctly in the holder.

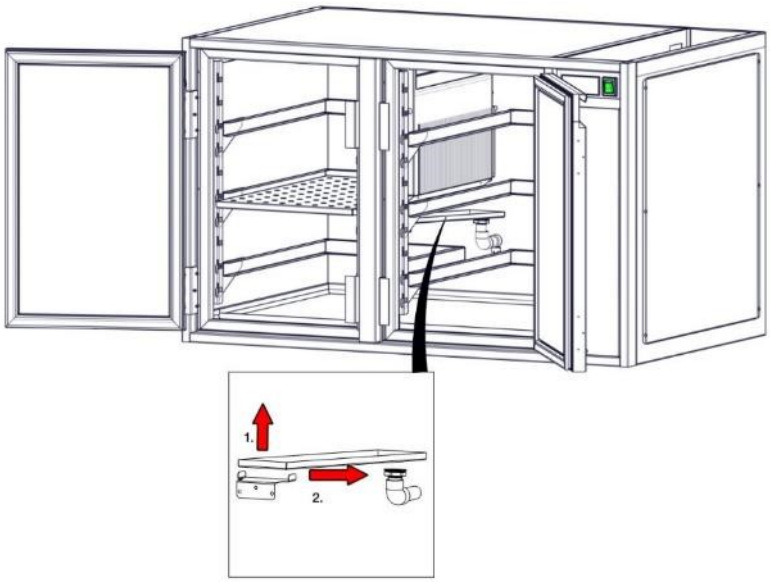

Figure 15: Cleaning the condensation water tray.

7th3rd1st Dismantling the drawers and guide rails type A

1. Pull the drawer out as far as it will go.

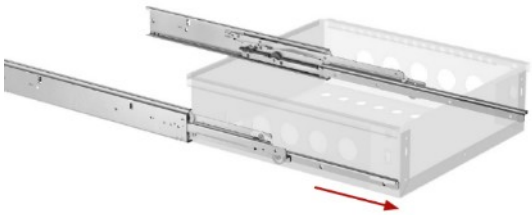

Figure 16: Stop drawer

2. Push the safety levers on the pull-out rails down and forward.

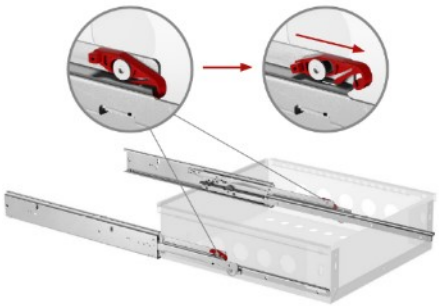

Figure 17: Safety lever

3. Pull the drawer upwards out of the guide with a gentle tug.

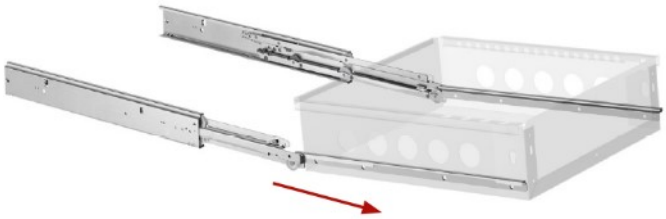

Figure 18: Drawer guide

4. Press the rear securing tabs upwards to pull out the centre rail.

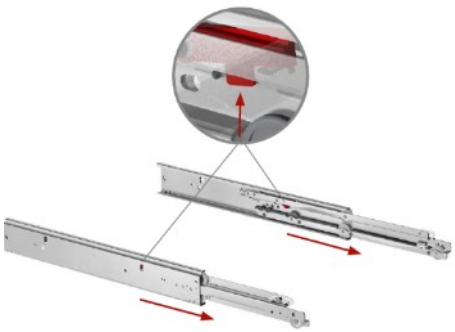

Figure 19: Rear locking tab

5. After cleaning, insert the centre rail first, then the drawer into the guide rail.
6. To lock the drawer, push the locking levers backwards.

Pictures from Original Fulterer Handling Instructions

7th3rd2nd Disassembly and cleaning of the guide rail type A

1. Remove the shop basket.
2. Pull the inner pull-out rail halfway out, turn it slightly inwards and pull it upwards until the fastening tab slides out of the guide.

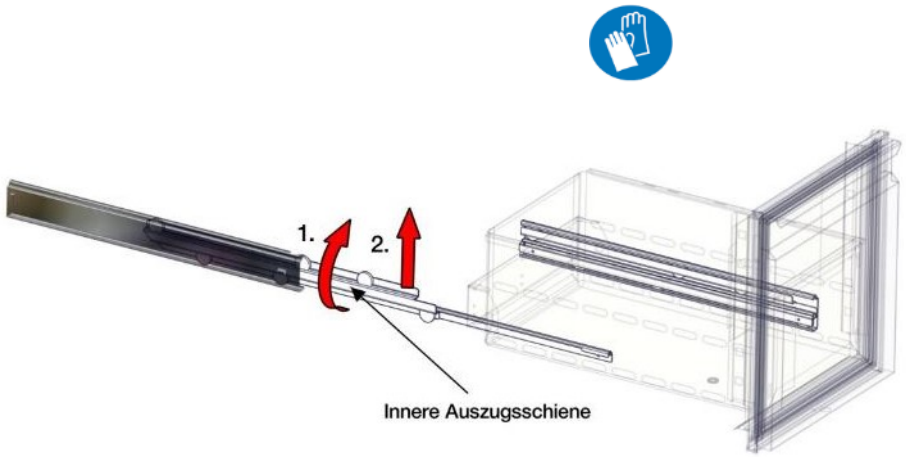

Figure 20: Turn the pull-out rail.

3. Pull the pull-out rail out to the front.

4. To reinsert, snap the rear fastening tab into the opening provided.
5. Engage the front flap slightly rotated into the front fastening opening and press it down firmly until the flap audibly clicks into place.

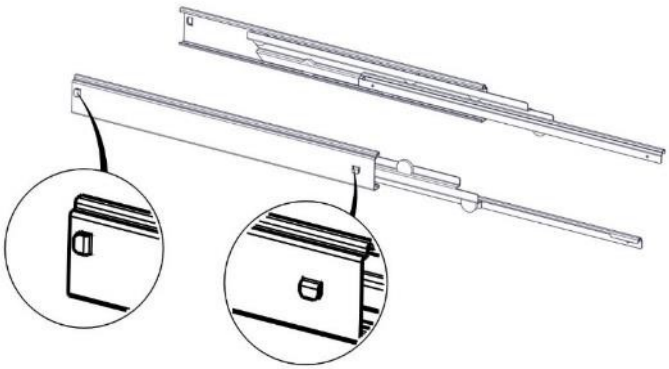

Figure 21: Reinserting the drawer runner

7.3.3. Cleaning cutting board for saladettes

The cutting board of Saladette refrigerated counters can be removed for easier cleaning.

1. Open the hinged lid as far as it will go.
2. Release the cutting board from the holder and remove it upwards.
3. Clean the cutting board with food-grade commercial cleaner and replace it.

7.3.4. Cleaning hygiene plate

1. Remove the cutting board and the support bars.
2. Remove coarse dirt and liquids from the hygiene tray before removing it.
3. Remove the hygiene tray by tilting it slightly and lifting it upwards out of the refrigerator unit.
4. Clean the hygiene tray and replace the tray, the support bars and the cleaned cutting board.

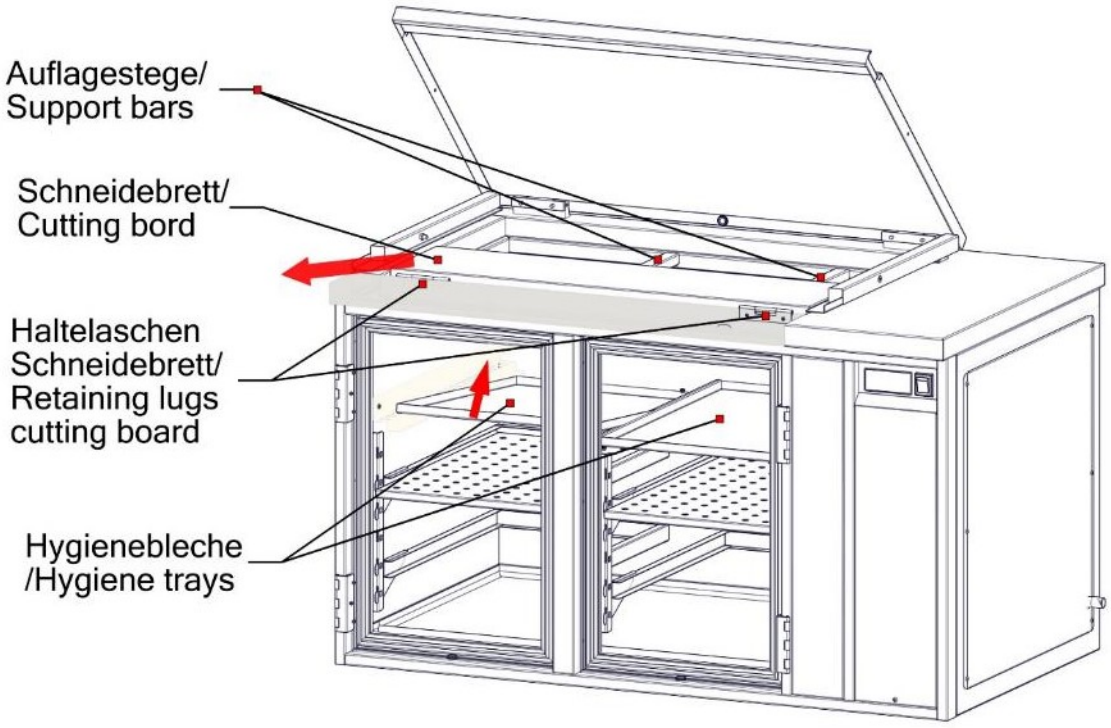

Figure 22: Cleaning the hygiene tray and cutting board

7.4. Maintenance

In addition to the daily cleaning work, service and maintenance by qualified specialists is required at regular intervals.

Manufacturer's recommendation:

Annual follow-up test according to VDE 0701-0702 by the operator.

Prescribed adjustments, service and inspection work must be completed in good time by an authorised service technician.

The operating personnel must be informed before starting maintenance or service work.

7.5. Maintenance table

Table 8: Maintenance table

ACTIVITY	INTERVALL		
VISUAL AND FUNCTIONAL TEST	DAILY	WEEKLY	MONTHLY
Defrost water tray, hot gas evaporation, electric defrost water tray (depending on model)	x		
Tub including drain and siphon	x		
All sliding and hinged doors and glasses	x		
Mechanical damage to all components of the unit	x		
Condenser (condenser) for impurities and damage		x	
Excerpts		x	
Night blind (depending on model)		x	
Gas struts (depending on model)			x

Work to be carried out by the service technician:

- Checking the thermostat setting
- Checking the refrigerant quantity
- Checking the tightness of the refrigeration system
- Maintenance and cleaning of the evaporator
- Safety check of the system

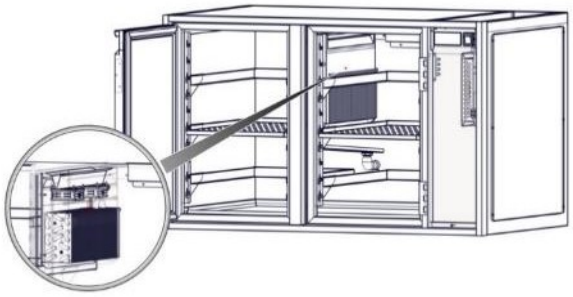

Figure 23: Position of evaporator for service

You can find maintenance instructions as a download online under the following QR code for the respective unit:

shop.ideal-ake.at/ersatzteilshop

8. Malfunction

If the unit is faulty or does not work, check the following points:

8.1. Refrigeration unit does not work

Table 5: Refrigeration unit does not work

Error	Remedy
The fuses assigned to the area have failed:	Check that the fuses are intact.
The protective contact plug is not correctly seated in the socket or in a defective socket:	Check the correct fit or function in another socket.
The main switch of the cooling unit is not switched on:	Press the main switch to ON - the green light must light up.
The electronics are set incorrectly or the display remains dark:	Contact a refrigeration specialist.

8th2nd Goods do not reach desired temperature

Table 6: Goods temperature

Error	*Remedy*
The grease filter or condenser is dirty:	Clean the grease filter or remove the machine compartment louver and clean the heat exchanger with a brush or hoover.
The ambient temperature is too high:	Avoid direct heat sources and direct sunlight.
A draught acting from outside disturbs the circulation circuit of the cold air:	The cooling unit must not be installed in draughty places.
The evaporator is heavily iced up:	Initiate manual defrosting or switch off the appliance completely for a few hours.
The cooling unit or other cooling components have a malfunction:	Notify a service technician.
The refrigeration controller is set incorrectly:	Notify a service technician.

8.3. Evaporator ices up constantly

Table 7: Evaporator iced up

Error	Remedy
No defrosting is initiated:	Initiate a manual defrost. If there is no remedy, contact a technician.
The air circulation in the cold room is obstructed:	Leave enough space for air circulation and keep the air openings clear.
Door/blind is held open too long:	Open the door / drawer / roller blind only as long as absolutely necessary.
Too much warm or humid ambient air is drawn into the cold room:	Make sure that the specified ambient conditions are observed.

8th4th Alarm and error message on the control element

The following alarms and error messages are shown on the display and provide information about a condition the unit is going through or inform about any errors:

Table 8: Alarms

Alarms
Temperature of cooling unit 1 too high
Temperature of cooling unit 1 too low
Temperature of cooling unit 2 too high
Temperature of cooling unit 2 too low
Temperature of cooling unit 3 too high
Temperature of cooling unit 3 too low
Humidity too high
Humidity too low
Condenser cleaning necessary
Defrosting failed KS 1
Defrosting failed KS 2
Defrosting failed KS 3

Table 9: Error messages

Error messages
Compressor does not run
Room sensor / return air sensor
Room sensor / supply air sensor
Humidity sensor
Evaporator sensor KS 1
Evaporator sensor KS 2
Evaporator sensor KS 3

- Provide the serial number and software version for service requests.

NOTE

In case of alarm messages, a refrigeration technician must be contacted. Failure to comply with alarm messages may result in loss of goods.

If error messages occur, contact a refrigeration technician immediately.

9. Parts overview / Spare parts

9.1. Parts overview

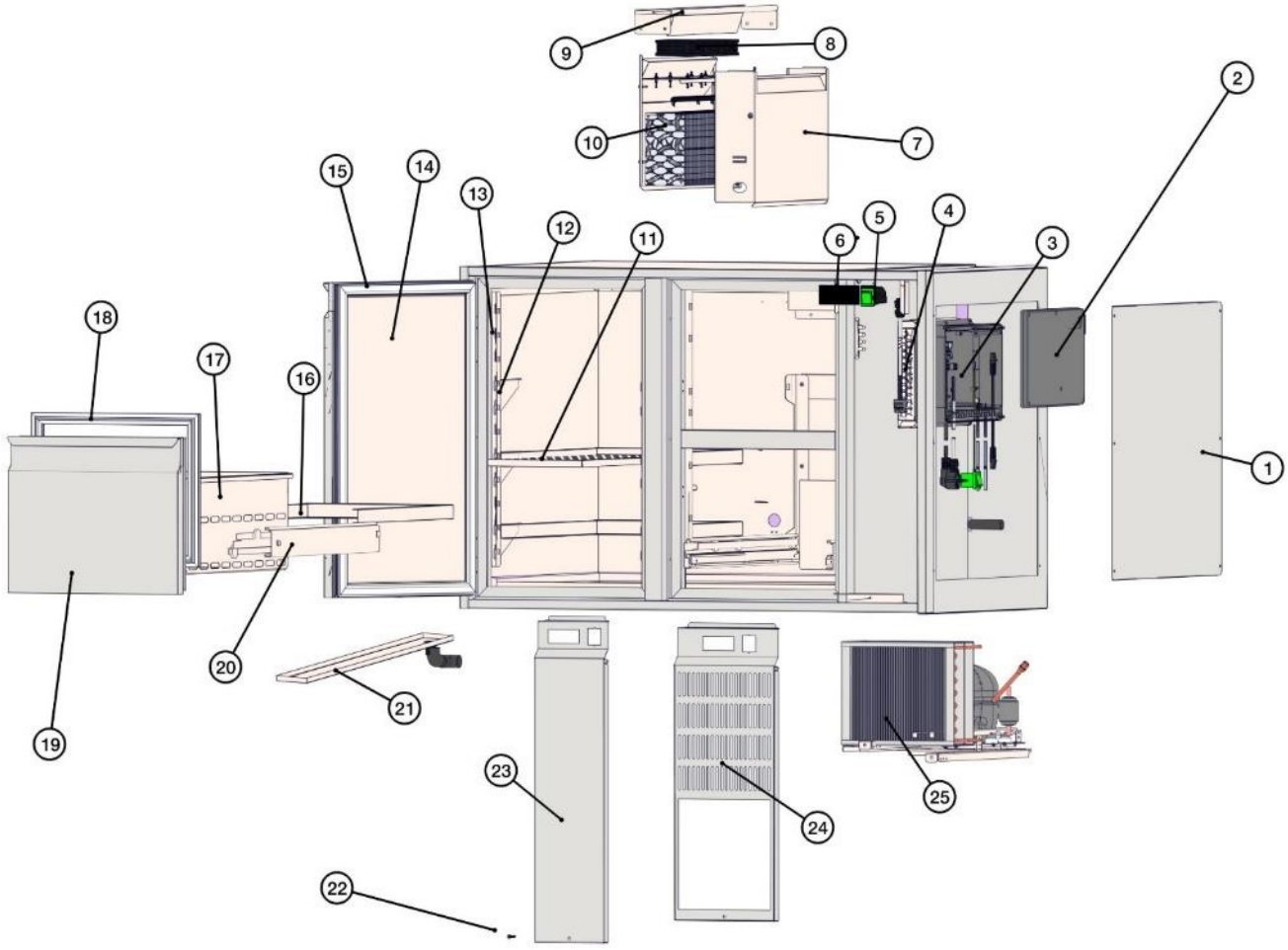

Figure 24: Parts overview

Position	Designation	Position	Designation
1	Maintenance cover	15	Plug-in seal door
2	Control box cover	16	Tilt-resistant support frame
3	Control box with control	17	Drawer basket with pull-out
4	Retaining plate with operating instructions	18	Plug-in seal drawer
5	On/Off switch	19	Shop sheet
6	Operating element/display module	20	Shop full extension
7	Evaporator cover	21	Condensation Cup with Drain Spigot
8	Evaporator fan	22	Fixing screw installation compartment
9	Bracket and air baffle Evaporator fan	23	Installation compartment cover for centrally cooled
10	Evaporator	24	Unit cover with louvre and grease filter, only for self-cooled units
11	Support grid	25	Aggregate set
12	Adjustable support angle		
13	Perforated strip/adjustable strip		
14	Door leaf		

Table 10: Parts overview

9.2. Spare parts

To order the correct spare parts, please provide your supplier or specialist dealer with the unit data indicated on the type plate - type, serial number and date of manufacture. You can also order the required spare parts directly via the online product catalogue.

https://shop.ideal-ake.at/ersatzteilshop/ersatzteile/

shop.ideal-ake.at/ersatzteilshop

9.3. Support

For technical questions, contact your supplier or the manufacturer:

IDEAL Refrigeration GmbH
In the Schörihub 28
4810 Gmunden
Austria
+43 7612 660 61
ersatzteile@ideal-ake.at
www.ideal-ake.at

NOTE

When contacting your support, have the serial number of your unit ready. You will find it on the type plate.

9.4. Further contact details for enquiries

Technical support:	+43 7612 660 61 ersatzteile@ideal-ake.at or office@ideal-ake.at
Webshop / Spare parts:	https://shop.ideal-ake.at/ersatzteilshop/
Availability of spare parts:	8 years after the last piece of the model group has been placed on the market.
Information about the model:	https://ec.europa.eu

10. Waste disposal / energy saving

10.1. Disassembly

Make your old appliance unusable before disposing of it to prevent misuse and the associated dangers.

- Disconnect the refrigeration unit from the mains supply.
- Disconnect all supply lines and remove the mains connection cable.
- Dismantle the doors if necessary.
- Remove all operating materials and dispose of them correctly.

10.2. Disposal

At the end of its service life, the discarded appliance must be disposed of in accordance with national regulations. It is recommended to contact a company specialised in disposal.

CAUTION

Wear protective gloves and eye protection when disposing of refrigerant. Do not use open flames when disposing of refrigerant. Dispose of the refrigerant properly and in an environmentally friendly manner.

NOTE

Please note that some components of the unit are electronic parts, therefore disposal via public waste disposal services is not possible. Check your obligations according to the national WEEE regulations. In any case, sorted disposal is mandatory.

10.3. Tips for saving energy

- Unit doors:
  - Do not open the unit doors unnecessarily, especially in hot and humid ambient temperatures.
- Ventilation slots:
  - Keep the ventilation slots free of goods and price tags.
  - Check the refrigeration unit regularly for sufficient air circulation.
- Stacking height:
  - Keep to the specified stack height and do not sort too much goods.
- Temperature:
  - Set the temperature correctly, depending on the goods being sorted.
  - Only bring pre-cooled goods into the refrigerated cabinet.
- Shortcomings:
  - Check the door seals regularly:
    - Open the door and, while closing it, hold a sheet of paper between it and the spot you think is leaking. If you can pull the sheet out again with little resistance while the door is closed, it is time to replace the seal.
  - Report defects:
    - defective closing mechanisms
    - Icing in the refrigeration unit
    - Unusual or loud noises from the fan

Proposal for a checklist for refrigerated cabinets:

What	Who	Measure	Done
Checking the doors: Do doors close tightly? Are rubber seals damaged?	☐Internal ☐External	Replace rubber seals Replace magnetic tapes	☐Yes ☐No
Control location: Can warm exhaust air be drawn in by other refrigeration units?	☐Internal ☐External	Rotate or relocate refrigeration units	☐Yes ☐No
Check condenser: Is the condenser dirty?	☐Internal ☐External	Clean condenser Hire a specialist company for cleaning	☐Yes ☐No
Control evaporator: Is the evaporator dirty?	☐Internal ☐External	Clean evaporator Hire a specialist company for cleaning	☐Yes ☐No
Control lighting? Is the lighting only on when necessary?	☐Internal ☐External	Check lighting times and correct if necessary	☐Yes ☐No

11. Appendix

11.1. List of figures

Figure 1: Example nameplate 12
Figure 2: Position of type plate 12
Figure 3: Layout 13
Figure 4: ShockWatch indicator 16
Figure 5: Condensation water connection 18
Figure 6: Odour closure 18
Figure 7: Saladette _Bridges 24
Figure 8: Counter_Station_bridges 24
Figure 9: Bottle separating rods 25
Figure 10: Insert bottle separator rods 25
Figure 11: Stacking mark 25
Figure 12: Cleaning the grease filter 28
Figure 13: Clean condenser 28
Figure 14: Position of condensation water tray 29
Figure 15: Cleaning the condensation water tray. 29
Figure 16: Stop drawer 30
Figure 17: Safety lever 30
Figure 18: Drawer guide 30
Figure 19: Rear locking tab 30
Figure 20: Turn the pull-out rail 31
Figure 21: Reinserting the drawer runner 31
Figure 22: Cleaning the hygiene tray and cutting board 32
Figure 23: Position of evaporator for service 33
Figure 24: Parts overview 36

11.2. List of tables

Table 1: Information requirements 5
Table 2: Key assignment 21
Table 3: Symbols on the display 21
Table 4: Gastronorm interior fittings 24
Table 5: Refrigeration unit does not work 34
Table 6: Goods temperature 34
Table 7: Evaporator iced up 34
Table 8: Alarms 35
Table 9: Error messages 35
Table 10: Parts overview 37